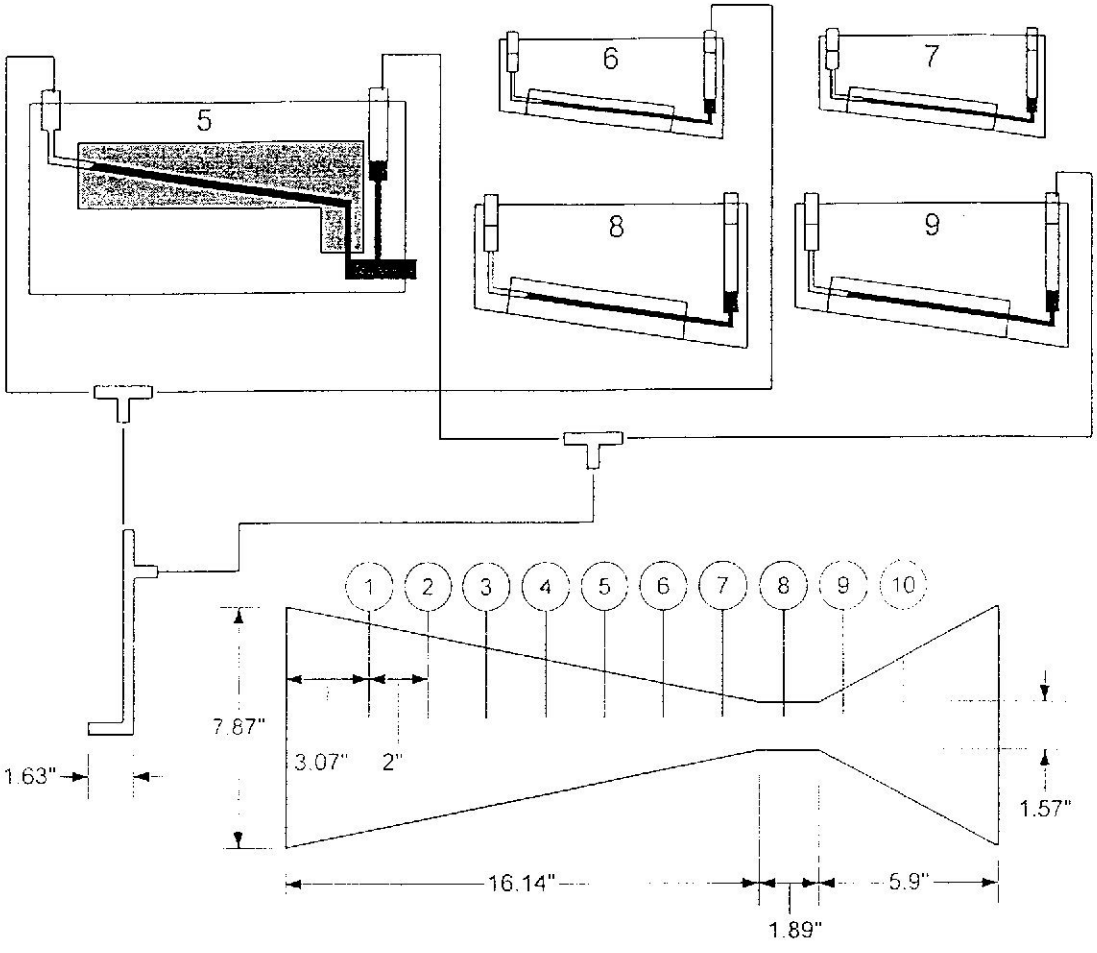

Volume Calculations:

The conservation of mass equation involved in the wind tunnel is:

$\rho_1 V_1 A_1 = \rho_2 V_2 A_2$ (ρ = density, V = velocity, A = area)

Since air is relatively incompressible at the pressures & temperatures created in the wind tunnel, the equation can be reduced to:

$V_1 A_1 = V_2 A_2$ (or $Q_1 = Q_2$)

Therefore, if the area decreases, the velocity will _____ .

When calculating the area at each of the openings, it is important to take into account the fact that the pressures will be read at the tip of the pitot tube which is 1.63" back from the opening. Assuming that width of the tunnel is "W", then the areas at 9 and 10 will be: $A_9 = 1.57W$ $A_{10} = 2.9W$

Use the information and geometry above to derive one equation for the area at holes 1 through 8 using N as the hole number and W as the width in the equation. ($A_N = \ldots$)